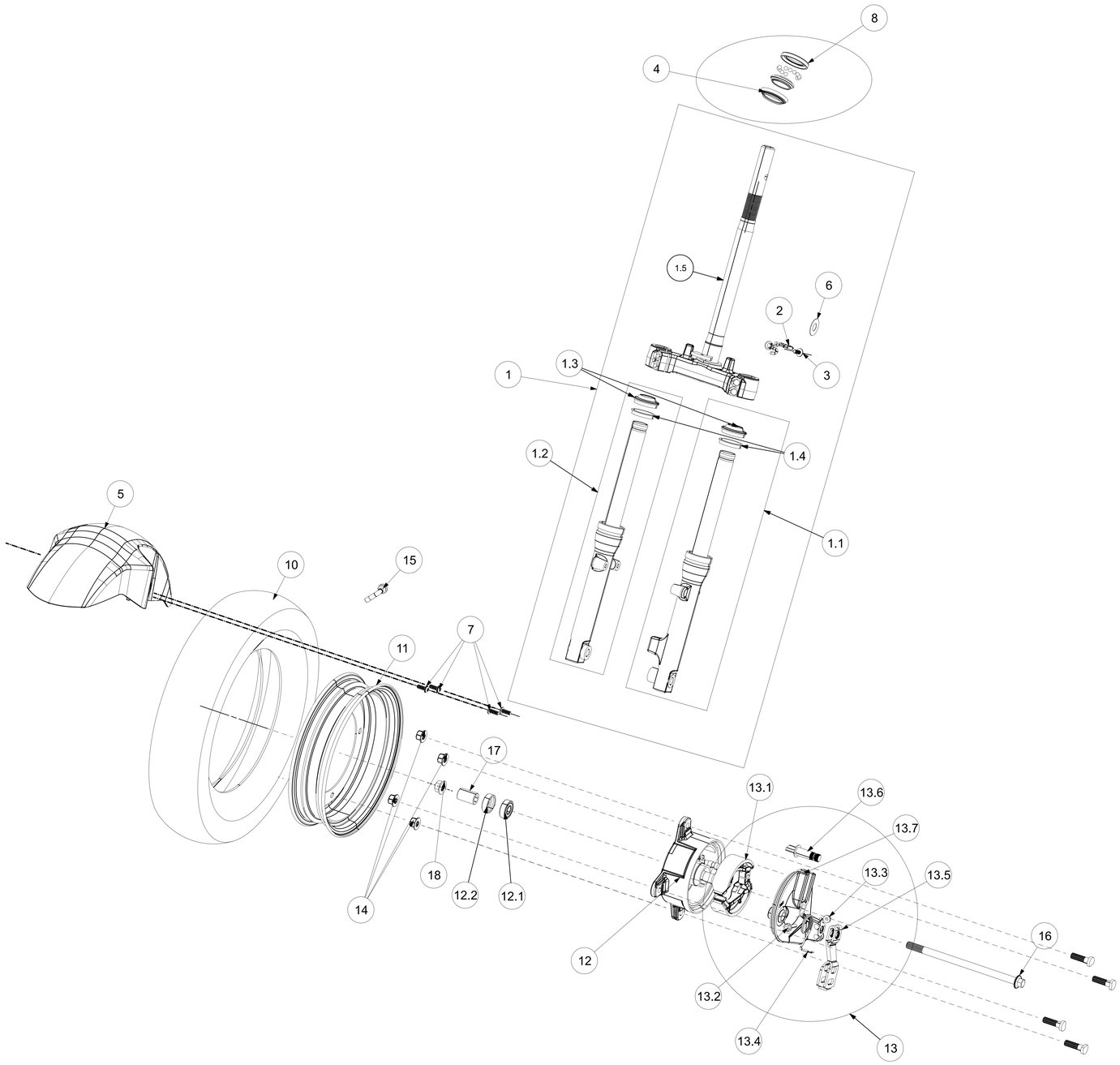FRONT WHEEL ASSEMBLY